Application for RS-232 Transceiver

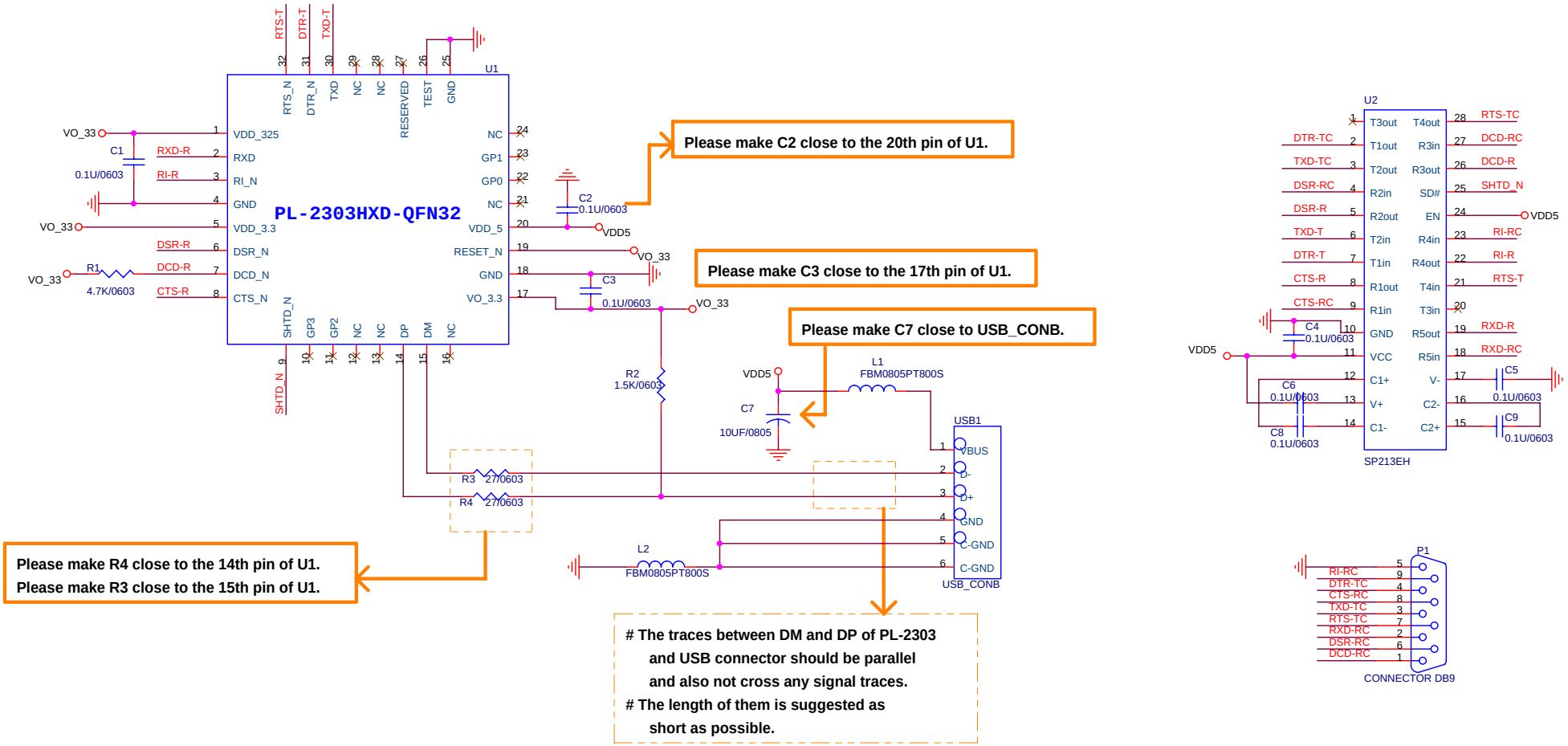

Prolific PROLIFIC TECHNOLOGY INC. 旺玖科技，探索新意	Drawing Name: PL-2303HXD-QFN32	Designer: name	Size: B
	Version: 1.0 / Date: 04/03/2006	Sheet 1 of 1	